NanoSpinner PilotLine

inovenso
innovative engineering solutions

2019

HYBRID ELECTROSPINNING TECHNOLOGY

About **INOVENSO**

We are the pioneer of the Electrospinning/Electrospraying market.
Our works are grouped as manufacturing Laboratory Scale Nanofiber Production Devices and Industrial Nanofiber Production Machines. Our main aim is to become a bridge between academy and industry. We maintain our R&D activities with help of the links established with academy.

Our devices and services have become highly demanded worldwide and we moved our international operations to Boston, MA, USA. Today, Inovenso Inc. is creating Nanotechnology ecosystems with its multidisciplinary departments and teams and is truly a global leader with more than 350+ devices all around the world and references from highly prestigious universities such as MIT, Stanford, Cornell and worldwide companies such as 3M, Honeywell and many others.

For more info visit: **www.inovenso.com**

About PILOT LINE

The NS Pilot Line is our Best-selling Electrospinning for the Continuous production of nanofibers. Its major advantage is scalability, as it's suitable for both Production line as well as R&D projects. The NS Pilot Line functions with 56 nozzles enabling high productivity for mass production of nanofibers, however it can also function with 1 nozzle when working on R&D projects.

Its unique design enables production of nanofibers and composites, it accommodates 4 syringe pumps and 4 High Voltage Power Suppliers, making it possible to work simultaneously with up to 4 different polymers, independently controlled.

PILOT SCALE ELECTROSPINNING SYSTEM

Hybrid Electrospinning Technology

NS Pilot Line uses a unique patented "Hybrid Electrospining Technology". This new technique combines the advantages of both Needle-based and Needle-less Electrospinning, which are: High throughput productivity (from the needle-less), with a very accurate control over the process and the final product (from needle-based Electrospinning).

NS PILOT LINE is installed in:

- MAYO CLINIC MINNESOTA, **USA.**
- ARGONNE NATIONAL LAB, **USA.**
- GIMHAE BIOMEDICAL CENTER, **KOREA.**
- SENAI CETIQT, **BRAZIL.**

UNIQUE USER INTERFACE

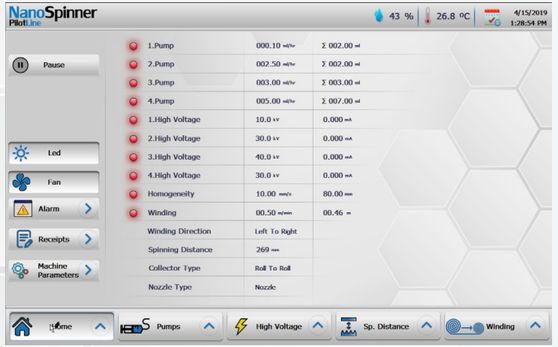

USER FRIENDLY

The control panel with well designed user friendly interface makes operation much easier.

ACCURATE CONTROL

Operator will be fully able to control all parameters.

RECIPE RECALL

The recipe recall function enables users to save parameters and recall them subsequently.

PRODUCT DESCRIPTION

- **Single and Multi Nozzle Operation**

Up to 56 Nozzles during full operation
Possible to work with single nozzle
Standard Different Diameters Nozzles can be attached optionally
4 Precise Syringe Pumps
4 High Voltage Power suppliers (40kV). Each of them charges different pipe sets.

- **Advanced Automation System**

Full control of process and system via 12 inches touch screen panel saving all important parameters and recalling them when needed. Equipped with extra safety features such as spark protection, safety-door option, integrated safety-relays.

- **Roll to roll collector:**

Fiber Deposition Width: 550 mm
Substrate Winding Speed: 0,01 m/min - 10 m/min
Coating Homogeneity System: X-axis repetitive motion
Stroke of Coating Homogeneity System: 20mm - 80mm
Speed of Coating Homogeneity System: 5-50 mm/sec

- **Minimum Required Solution**

Single Nozzle Feeding: 2ml
Feeding each Pipe Set: 15ml
Full Loading: 60ml

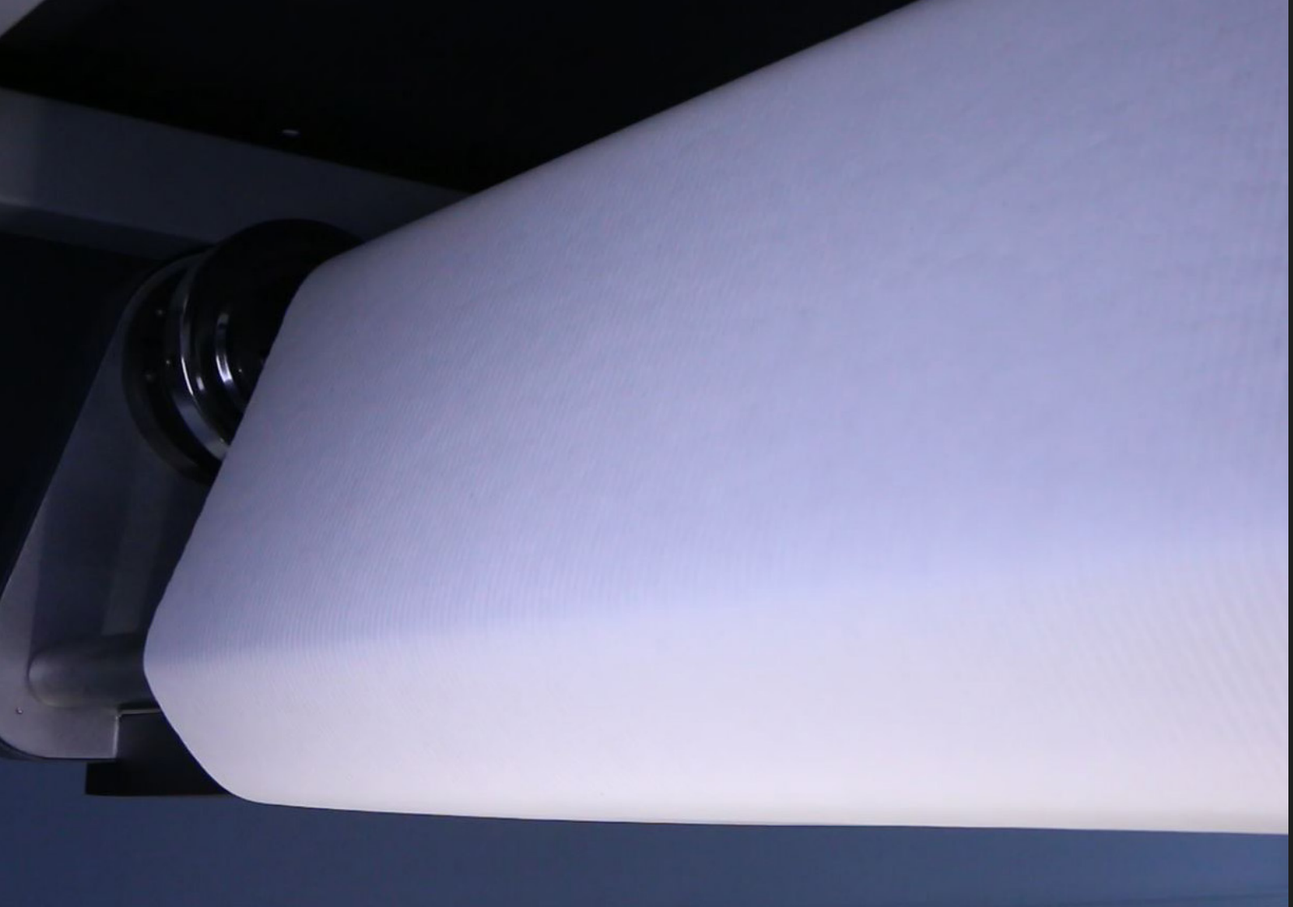

APPLICATION AREAS:

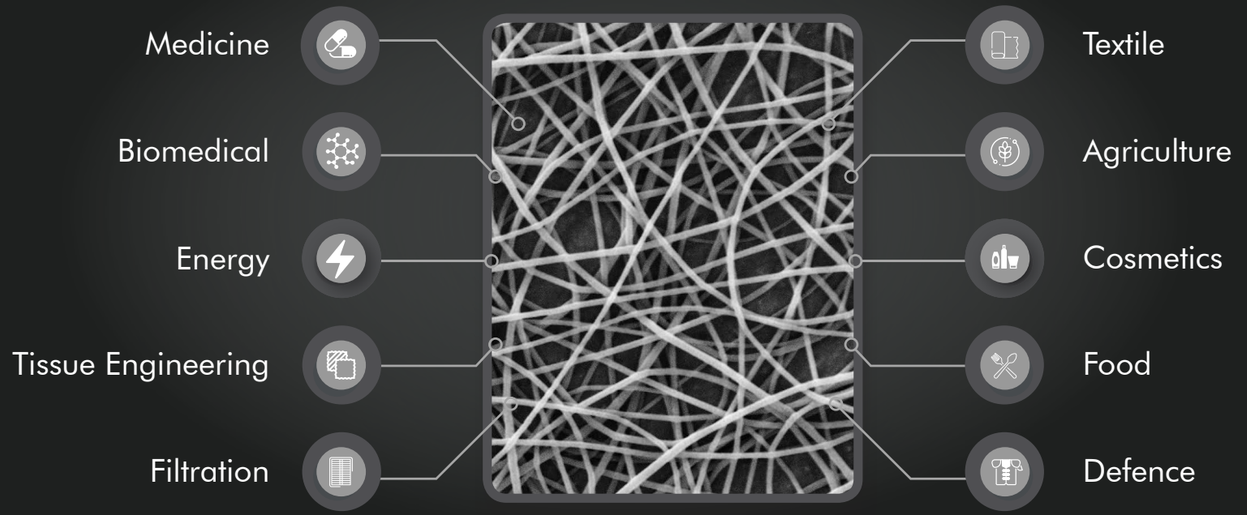

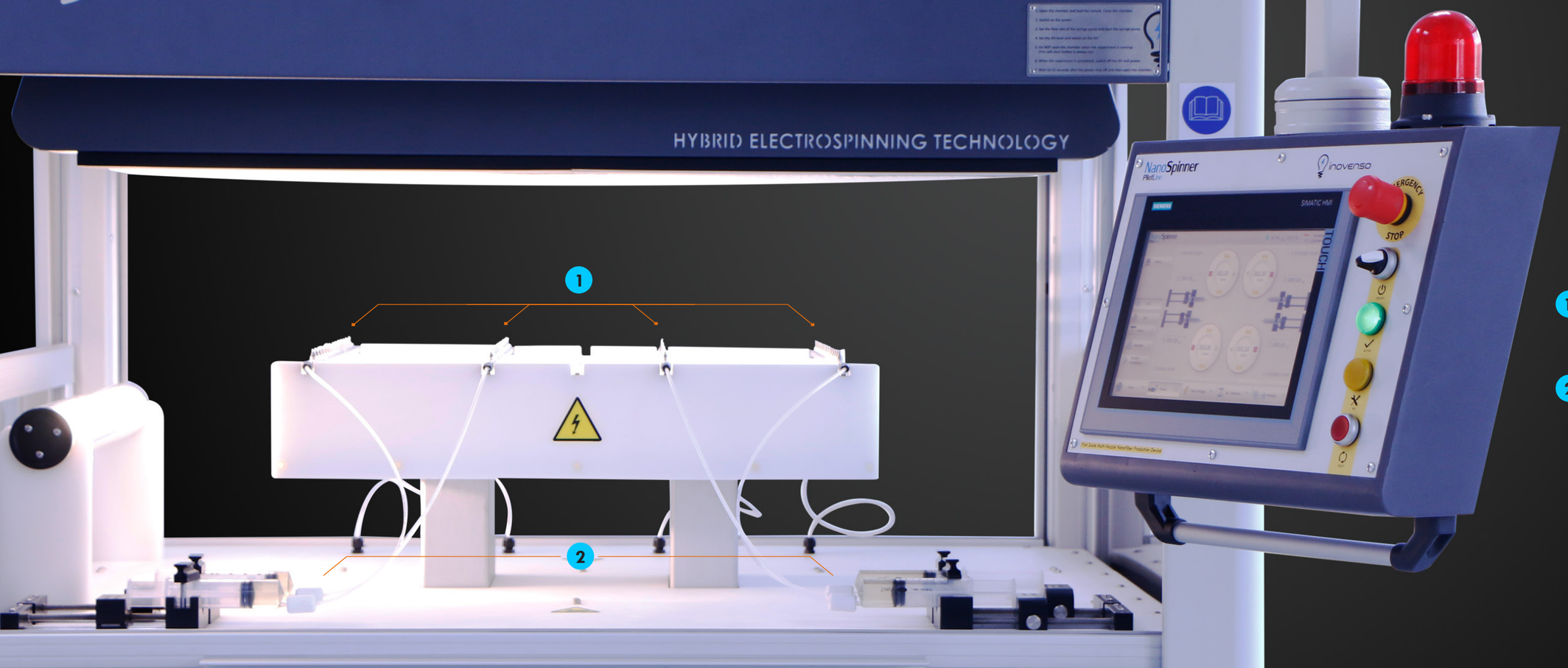

1. 4 Integrated High Voltage Suppliers for each of the 4 nozzle rods.
2. 4 Individually adjustable syringe pumps to infuse up to 4 solutions simultaneously.

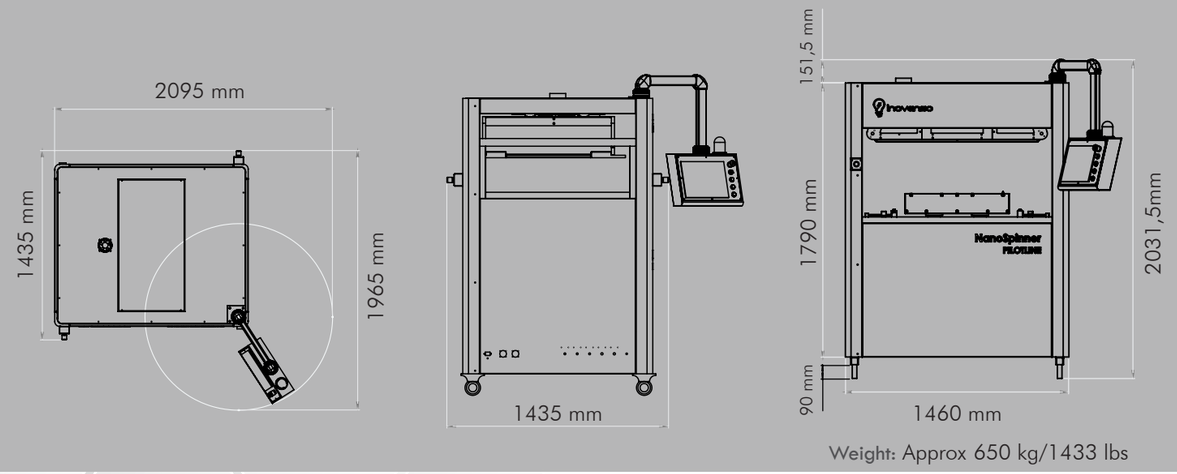

Weight: Approx 650 kg/1433 lbs

TECHNICAL DRAWING

TECHNICAL DRAWING OF PILOT LINE

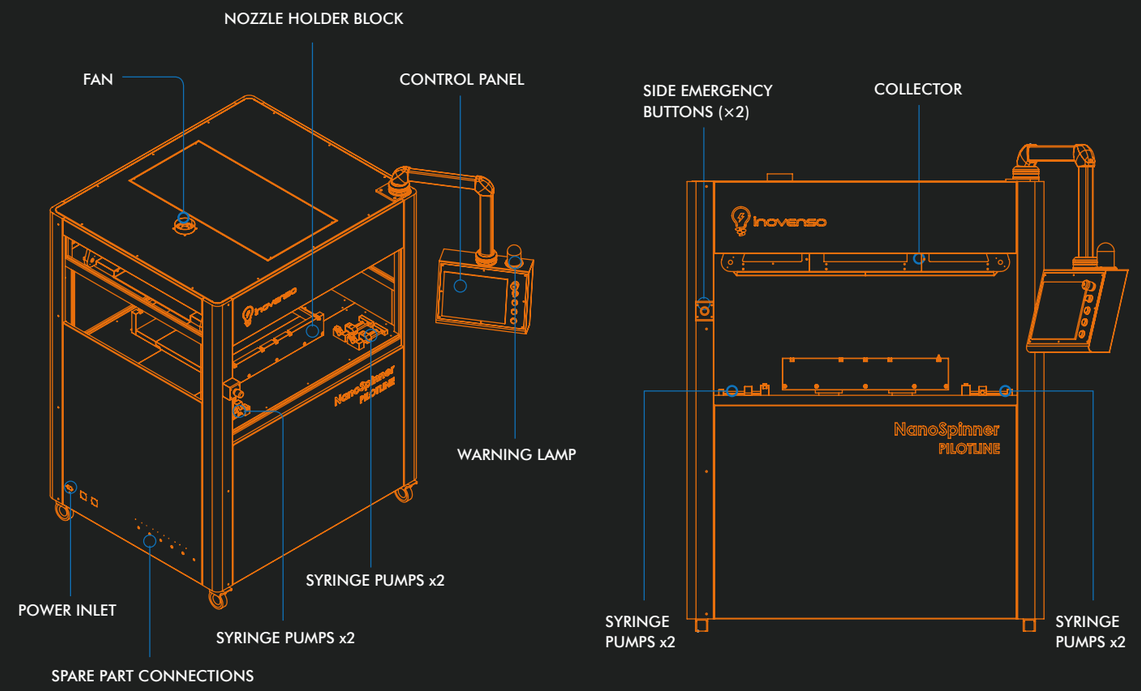

3D TECHNICAL DRAWING

3D Technical Drawing of Pilot Line

inovenso
innovative engineering solutions

Inovenso Inc.
100 Cambridge St 14th Floor
Boston, MA 02114
sales@inovenso.com •www.inovenso.com